□□□□□□□□□□□□□

© Walmart

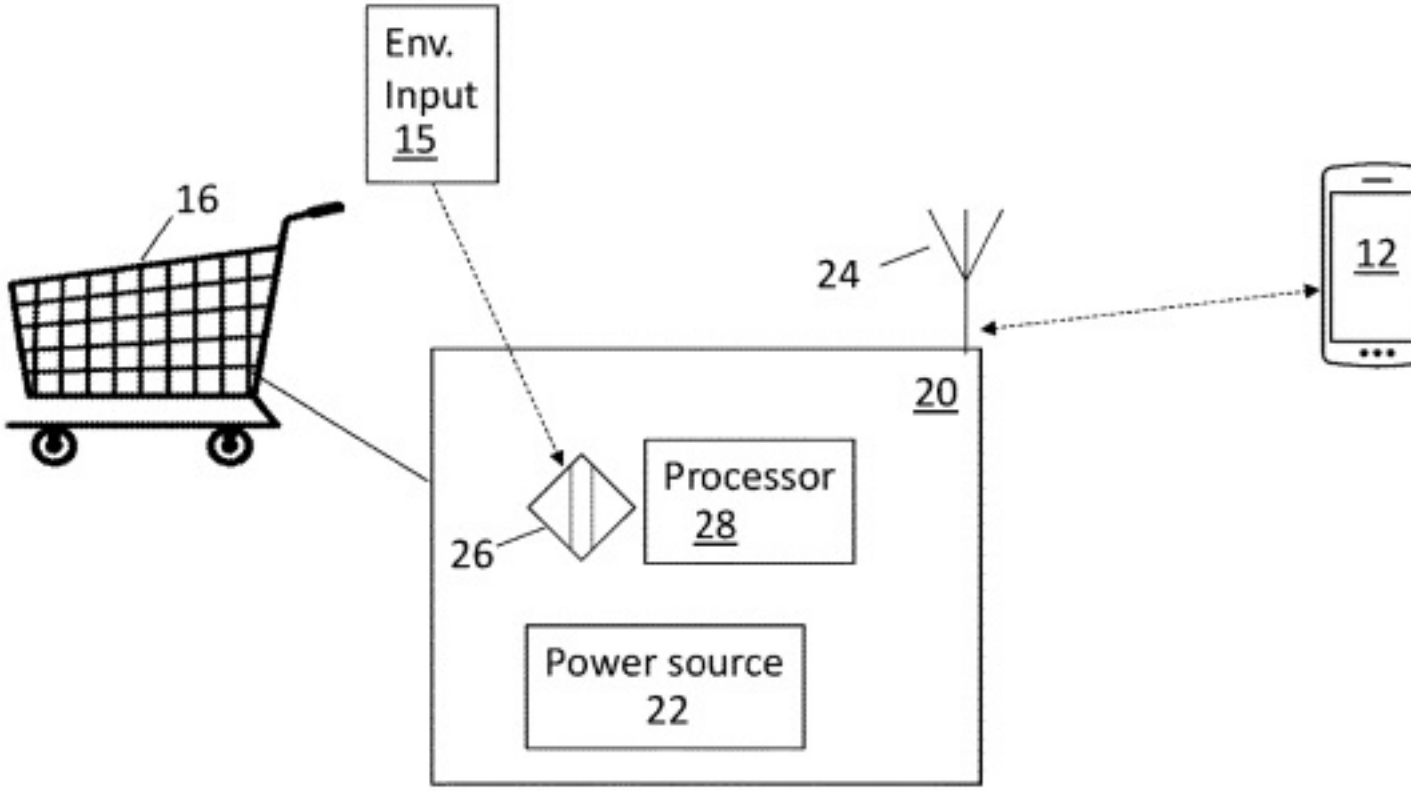
Env.
Input
15
16
24
12
20
Processor
28
26
Power source
22

[illegible]